Submersible Pond Pump with UV
800 Gallons Per Hour

ITEM #PP800UV

REMINDER
CALL 1-888-755-6750
BEFORE RETURNING TO STORE.

Questions, problems, missing parts? Before returning to your retailer, call our customer service department at 1-888-755-6750, 8 a.m.-6 p.m., EST, Monday-Friday, or email us at customercare@thepondboss.net. Or visit our website www.thepondboss.net.

PACKAGE CONTENTS

Part	Description	Quantity
A	Pump	1
B	1-in. adapter with flow control	1
C	Pump barrier bag	1

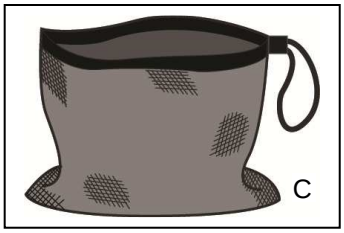

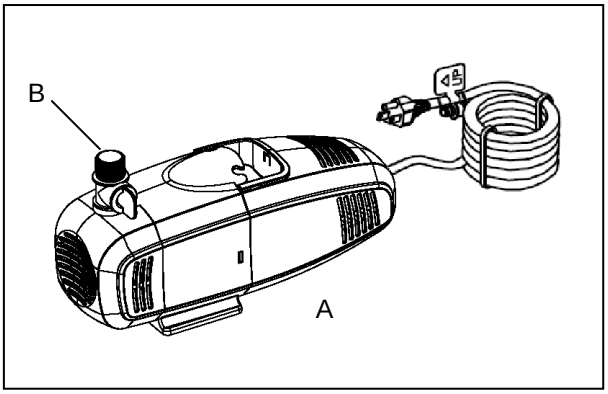

WARNINGS AND CAUTIONS

WARNING

- Risk of electrical shock. This pump is supplied with a grounding conductor and grounding–type attachment plug. To reduce the risk of electric shock, be certain that it is connected only to a properly grounded, grounding-type receptacle.
- Do not exceed the voltage shown on the pump.
- Always disconnect pump from the power source before beginning any maintenance or work on the pump.
- Inspect cord for damage before installation and/or maintenance. Replace the entire pump assembly if damage is found.
- Do not remove the grounding pin from the power cord plug.
- Risk of electrical shock: This pump has not been investigated for use in swimming pools or marine areas.

CAUTION

- This pump has been evaluated for use with fresh water only.
- Use a proper power source as indicated on the pump label.
- Keep the cord away from high temperatures or other heat sources.
- Do not pump heated liquids.
- Do not let the pump run dry. Pump must be completely submerged for proper operation and cooling.
- Operate in fresh water only. Avoid heavily chlorinated water and water with high pH levels.
- Do not lift the pump by its power cord.

CAUTION

- UV light may cause irritation to the skin and/or eyes. Avoid exposure.

PLEASE CALL 1-888-755-6750 BEFORE RETURNING TO THE STORE.
WWW.THEPONDBOSS.NET

- DANGER – ULTRAVIOLET RADIATION – disconnect power before replacing lamp.
- Prolonged or repeated exposure to UV light may have adverse physical effects including, severe damage to your skin and eyes. Seek immediate medical attention for overexposure to UV radiation.
- This light assembly has not been investigated for use in swimming pools or hot tubs.

PREPARATION

Before beginning assembly or operation of product, make sure all parts are present. Compare parts with package contents list and diagram above. If any part is missing or damaged, do not attempt to assemble, install or operate the product. Contact customer service for replacement parts.

- Estimated Assembly Time: 5 minutes
- Tools Required for Assembly: Philipshead screwdriver.

OPERATION INSTRUCTIONS

1. Connect the adapter to the pump by inserting into the pump discharge and twisting clockwise. Then connect tubing to the adapter. Fig. 1

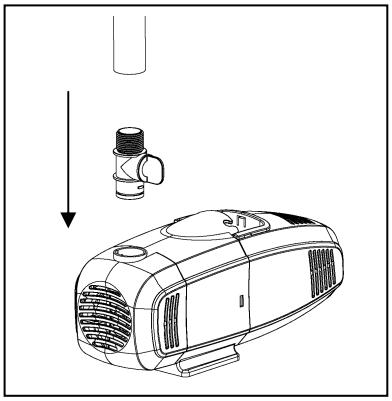

Fig. 1

2. Route the power cord through the handle on the top of the pump. Fig. 2

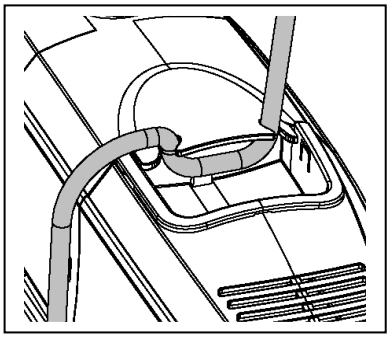

Fig. 2

3. Place the pump inside the pump barrier bag. Pull the drawstring until the pump barrier bag is fully closed around the tubing and power cord. Tie a knot in the drawstring. Fig. 3

Fig. 3

4. Place the pump into the water and connect to a proper power source. Fig. 4

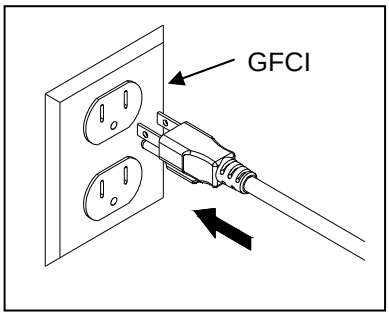

Fig. 4

5. Note the indicator light on the back of the pump. This light indicates whether or not the UV light is on or off. Fig. 5

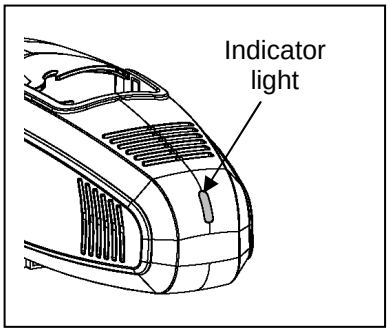

Fig. 5

6. Adjust the flow control to the preferred setting. Fig. 6

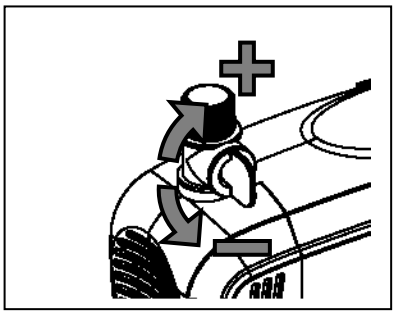

Fig. 6

MAINTENANCE PROCEDURE

In order to insure optimal operation of the UV pump, the following procedures should be performed periodically. When the performance of the pump is reduced – it is an indication that cleaning of the unit is needed.

1. Unplug pump, remove from pond. Fig. 7

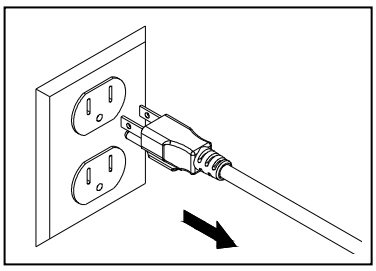

Fig. 7

2. Untie the drawstring on the pump barrier bag and then remove the pump from the pump barrier bag. Clean the pump barrier bag then place the pump back inside the pump barrier bag and test the pump. Fig. 8

   NOTE: If the pump performance is still unsatisfactory, unplug the pump and proceed to step 3.

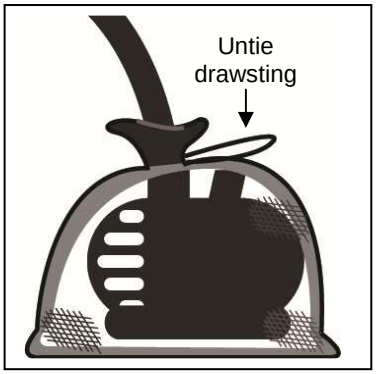

Fig. 8

3. Remove the front cover from the pump. Fig. 9

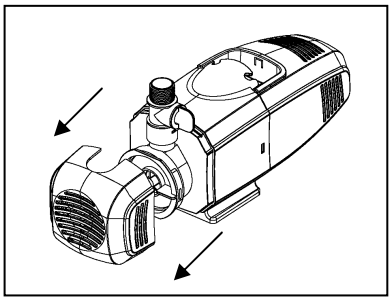

Fig. 9

4. Remove the impeller cover to expose the impeller assembly. Remove the impeller assembly by gently pulling on the impeller blades. Use a soft cloth or brush to clean the impeller assembly and inside of the impeller housing. Fig. 10

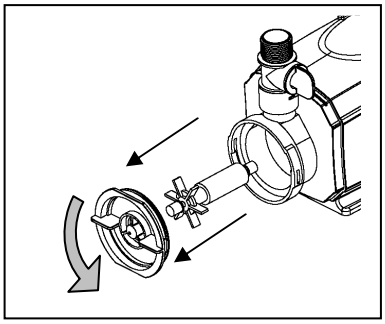

Fig. 10

5. Remove the locking screw, which is located on the bottom of the pump. Fig. 11

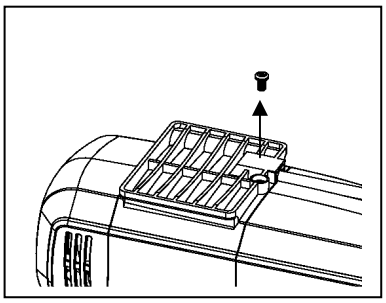

Fig. 11

6. Remove rear cover by gently pressing on the sides and pulling it away from the pump. Fig. 12

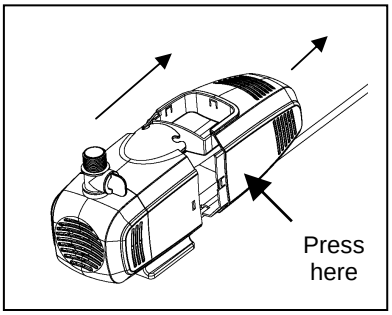

Fig. 12

7. Remove the light cover from the pump by turning it counterclockwise and pulling it away from the pump. Fig. 13

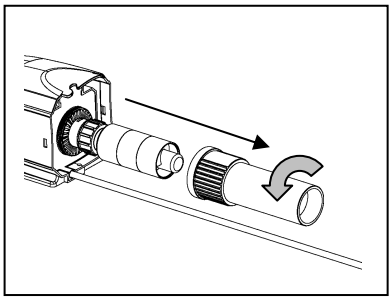

Fig. 13

8. Note: In the unlikely event the UV bulb needs replacing, remove glass tube by turning the glass tube assembly counterclockwise and pulling away from the lamp base. Gently the pull bulb straight apart from the bulb socket and insert the replacement bulb in the reverse manner. Fig. 14

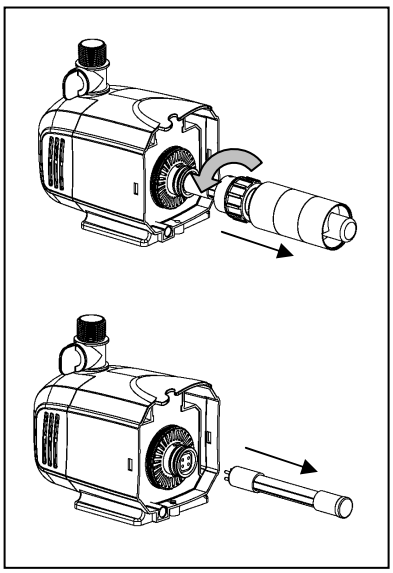

Fig. 14

9. Clean the exterior of the UV glass tube with warm soapy water. Fig. 15

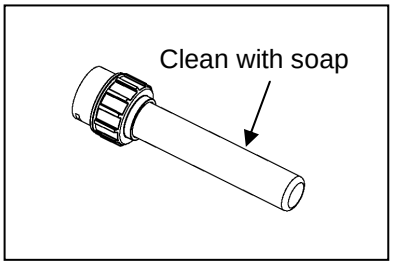

Fig. 15

10. Reassemble all of the components. Fig. 16

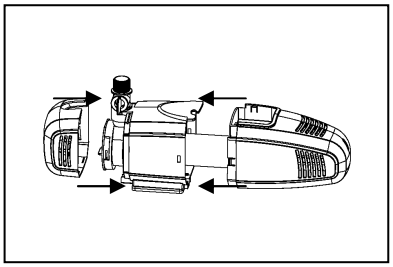

Fig. 16

CARE AND MAINTENANCE

- Clean the pump regularly depending upon the environment in which it is operated. Clean the pump when it is visibly soiled or when a drop in performance is detected.
- Before cleaning, always disconnect the pump from the power source.
- Remove all parts from the pump and clean in warm, soapy water.
- Remove any large debris from pump barrier bag. Use a garden hose to rinse off any other dirt from the pump barrier bag.

TROUBLESHOOTING

If the pump fails to operate:

- Check to make sure the power cord is plugged in, the pump is getting power and the pump is fully submerged.
- Check the pump outlet and any tubing, fountains, spitters etc. for kinks or obstructions.
- Remove the inlet screen and/or pump cover, and impeller cover to expose the impeller. Turn the impeller to ensure that it is not broken or jammed. Also check the ceramic shaft to make sure that it is not broken.

If the performance of the pump is not satisfactory or the pump does not flow evenly:

- Check to make sure the pump is completely submerged in water.
- Check to make sure the impeller and the housing are clean clear of debris.
- Check the pump outlet and any tubing, fountains, spitters etc. for kinks or obstructions.
- Adjust flow control.
- Check to make sure the pump barrier bag is clean.

REPLACEMENT PARTS LIST

For replacement parts, call our customer service department at 1-888-755-6750, 8 a.m.-6 p.m., EST, Monday-Friday, or email us at customercare@thepondboss.net.

Part	Description
B	1-in. adapter with flow control
C	Pump barrier bag
D	Front cover
E	Impeller cover
F	Impeller assembly
G	Ceramic shaft
H	Shaft support
I	Rear cover
J	Top cover
K	Screw
L	Light cover
M	Flow chamber
N	Glass tube assembly
O	UV bulb

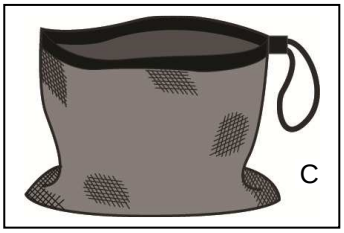

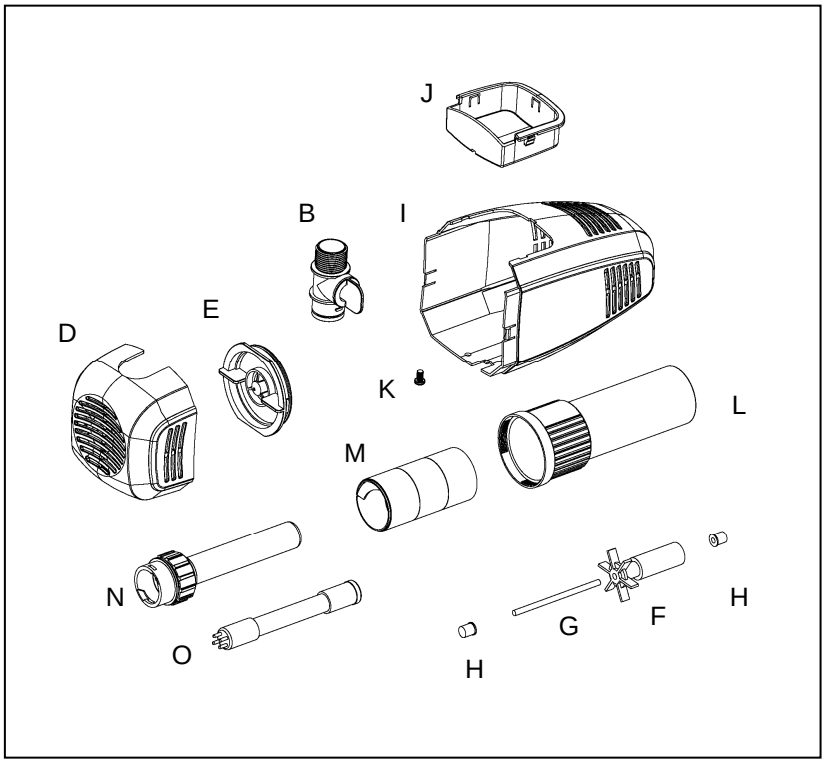

PUMP PERFORMANCE

		FLOW RATES
LIFT (FEET)	10	213 GPH
	9	278 GPH
	8	354 GPH
	7	436 GPH
	6	502 GPH
	5	565 GPH
	4	617 GPH
	3	680 GPH
	2	751 GPH
	1	832 GPH
	0	950 GPH
PP800UV		

Printed in China

PLEASE CALL 1-888-755-6750 BEFORE RETURNING TO THE STORE.
WWW.THEPONDBOSS.NET

LIMITED WARRANTY

All pumps and electrical products are warranted to the user against defective material and workmanship, under normal working conditions. This warranty period begins on the date of purchase by the original purchaser.

Unless otherwise specified all pond boss® electrical products are warranted to the user against defective material and workmanship, under normal working conditions for 1 year from the date of purchase.

- Pond and Waterfall pumps are warranted for 3 years.
- All pond boss® liners are warranted to the user against defective workmanship, under normal working conditions for 20 years from the date of purchase.
- All other pond boss® products are warranted to the user against defective material and workmanship, under normal working conditions for 90 days.

Application

Warranty covers only properly installed and maintained units. Any damage to the cord or modification to the unit will invalidate the warranty. Pump warranty is limited to applications pumping fresh water in a pond or fountain only. Other liquid applications or extreme temperature uses must be approved in writing by the manufacturer. Receipt and product date code are required for warranty claims.

Warranty Claim

Warranty claims must be made by calling customer service (at 1-888-755-6750). If the item is determined to be defective, you will be given authorization to return the defective part(s), freight pre-paid, along with proof of purchase.

Disposition

The manufacturer will make a good faith effort for prompt disposition regarding all warranty claims. Returned product will be inspected to determine cause of failure before warranty is applied. Warranty does not cover any costs associated with the shipping, handling, installation or removal of products or parts subject to this warranty. For products damaged in transit, a claim should be filed with the carrier.

Disclaimer

Any oral statements made about the product by the seller, the manufacturer, the representatives, or any other parties do not constitute warranties, should not be relied upon by the user, and are not part of the contract for sale. The seller's and manufacturer's only obligation, and buyer's only remedy shall be for the manufacturer to either replace and/or repair at the manufacturer's sole discretion, the product as described above. Neither seller nor the manufacturer shall be liable for injury, loss or damages for lost profits, lost sales, injury to person or property, or any other incidental or consequential loss arising from any cause whatsoever, no matter whether based upon warranty, contract, negligence or other misuse, and the buyer and user agree that no other remedy shall be available to them. Before using, the buyer and user shall determine the suitability of the product for the intended use, and assume all risk and liability whatsoever in connection therewith. The warranty and remedy described in this limited warranty is an exclusive warranty and remedy in lieu of any other warranty or remedy expressed or implied. All other warranties and remedies are hereby expressly excluded, including but not limited to any implied warranty of merchantability of fitness for any particular purpose. This warranty gives the buyer and user specific legal rights, and buyer and user may also have other rights which vary from state to state. Some states do not allow exclusions or limitations of incidental or consequential damages, so the above limitations or exclusions may not apply to you.

REMINDER

CALL 1-888-755-6750
BEFORE RETURNING TO STORE.